SECTION AV

AUDIO, VISUAL & TELEPHONE SYSTEM

CONTENTS

PRECAUTIONS **2**
Precautions for Supplemental Restraint System (SRS) “AIR BAG” and “SEAT BELT PRE-TENSIONER” 2
Wiring Diagrams and Trouble Diagnosis 2
PREPARATION **3**
Commercial Service Tools 3
AUDIO **4**
System Description 4
Wiring Diagram —AUDIO— 5
Terminals and Reference Value for Audio Unit 7
Trouble Diagnoses 8
AUDIO UNIT 8
Inspection 9
AUDIO UNIT 9
ANTENNA 9
Removal and Installation of Audio Unit 10
REMOVAL 10
INSTALLATION 10
Removal and Installation of Speakers 10
REMOVAL 10
INSTALLATION 10
Removal and Installation of Tweeters 11
REMOVAL 11
INSTALLATION 11
AUDIO ANTENNA **12**
Antenna Route 12
Removal and Installation of Roof Antenna 12

PRECAUTIONS

PFP:00011

Precautions for Supplemental Restraint System (SRS) “AIR BAG” and “SEAT BELT PRE-TENSIONER”

AKS00BEC

The Supplemental Restraint System such as “AIR BAG” and “SEAT BELT PRE-TENSIONER”, used along with a front seat belt, helps to reduce the risk or severity of injury to the driver and front passenger for certain types of collision. Information necessary to service the system safely is included in the SRS and SB section of this Service Manual.

WARNING:

- **To avoid rendering the SRS inoperative, which could increase the risk of personal injury or death in the event of a collision which would result in air bag inflation, all maintenance must be performed by an authorized NISSAN/INFINITI dealer.**
- **Improper maintenance, including incorrect removal and installation of the SRS, can lead to personal injury caused by unintentional activation of the system. For removal of Spiral Cable and Air Bag Module, see the SRS section.**
- **Do not use electrical test equipment on any circuit related to the SRS unless instructed to in this Service Manual. SRS wiring harnesses can be identified by yellow and/or orange harnesses or harness connectors.**

Wiring Diagrams and Trouble Diagnosis

AKS00BED

When you read wiring diagrams, refer to the following:

- Refer to GI-14, "How to Read Wiring Diagrams" in GI section
- Refer to PG-2, "POWER SUPPLY ROUTING" for power distribution circuit in PG section

When you perform trouble diagnosis, refer to the following:

- Refer to GI-10, "HOW TO FOLLOW TEST GROUPS IN TROUBLE DIAGNOSES" in GI section
- Refer to GI-26, "How to Perform Efficient Diagnosis for an Electrical Incident" in GI section

PREPARATION

PFP:00002

Commercial Service Tools

AKS00BVB

Tool name	Description
Power tool 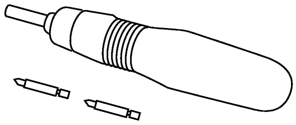 PBIC0191E	Loosening bolts and nuts

AUDIO

PFP:28111

System Description

AKS00BEE

Refer to Owner's Manual for audio system operating instructions.
Power is supplied at all times

- through 15A fuse (No. 32, located in the fuse and fusible link box)
- to audio unit terminal 6.

With the ignition switch in the ACC or ON position, power is supplied

- through 10A fuse [No. 4, located in the fuse block (J/B)]
- to audio unit terminal 10.

Ground is supplied through the case of the audio unit.
Audio signals are supplied

- through audio unit terminals 1, 2, 3, 4, 13, 14, 15 and 16
- to terminals 1 and 2 of front door speaker LH and RH
- to terminals 1 and 2 of rear door speaker LH and RH and
- to terminals 1 and 2 of tweeter LH and RH.

Wiring Diagram —AUDIO—

AKS00BEF

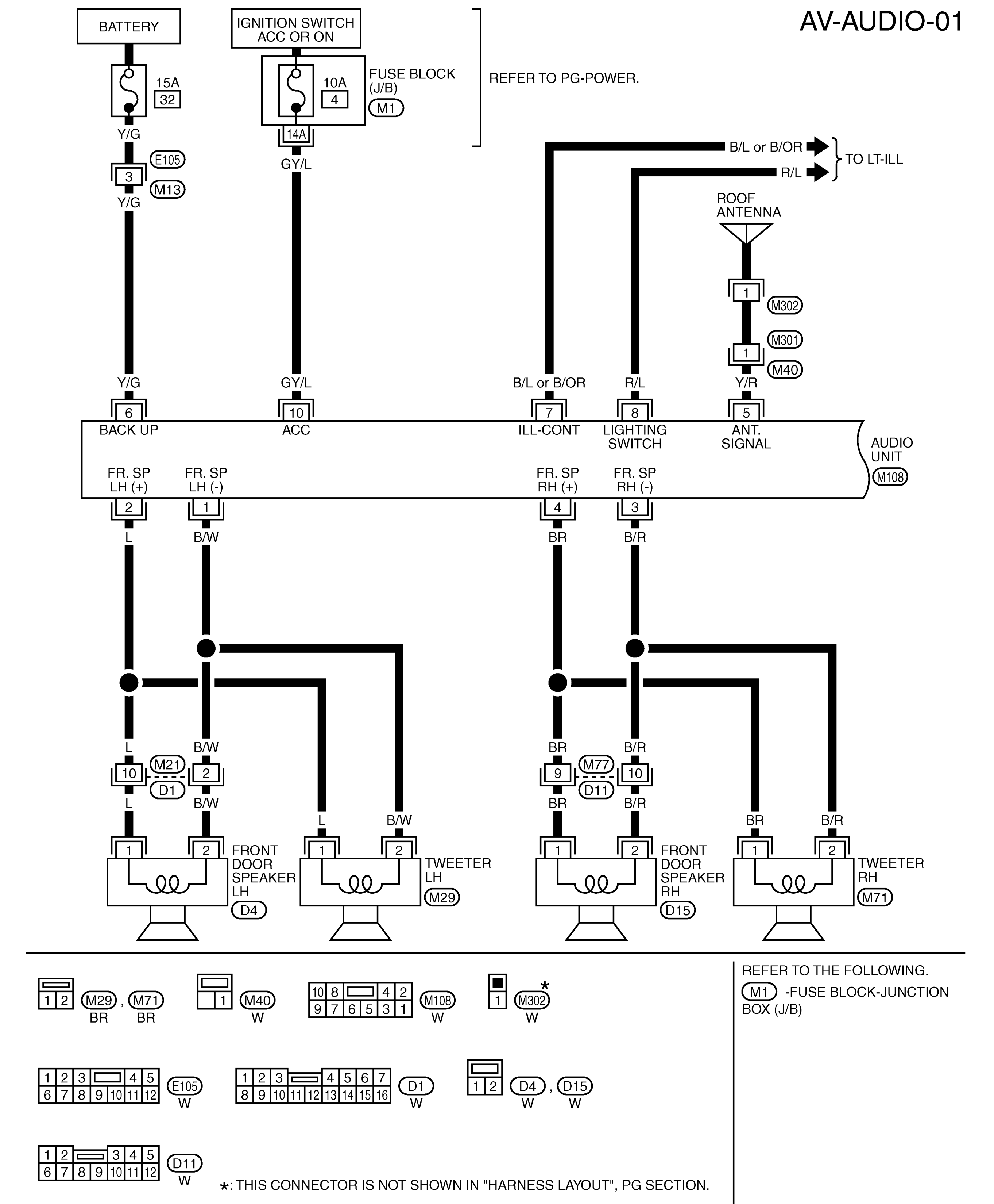

AV-AUDIO-02

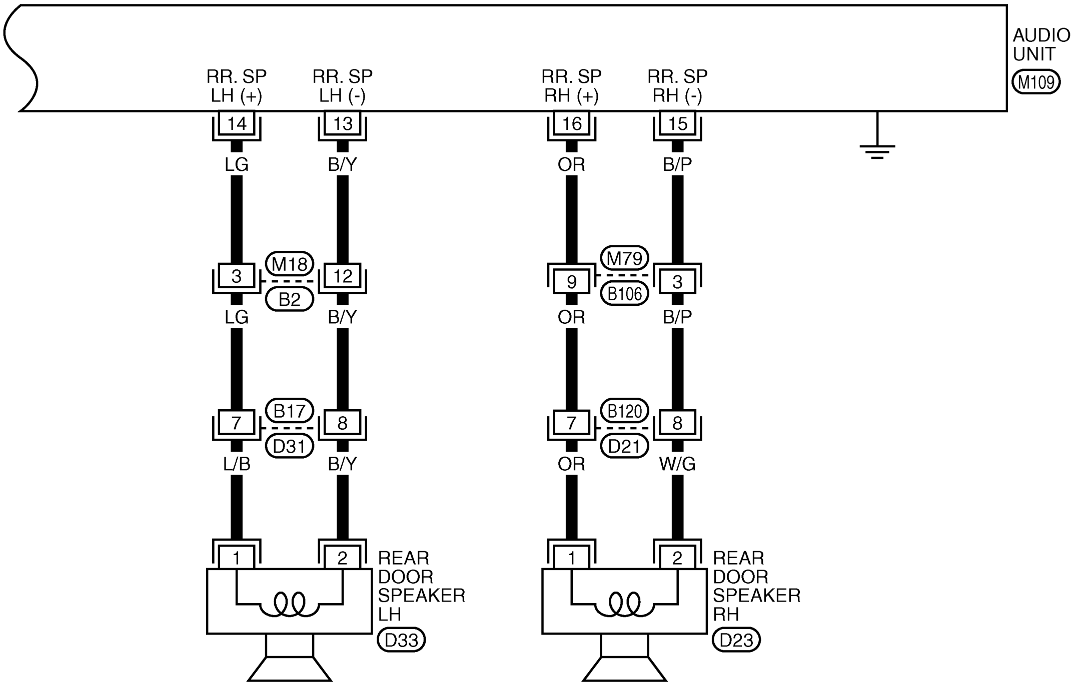

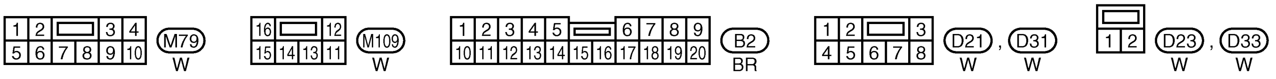

TKWB0201E

Terminals and Reference Value for Audio Unit

AKS00BEG

Terminal (Wire color)		Item	Signal input/ output	Condition		Reference value	Example of symptom
(+)	(–)			Ignition switch	Operation		
2 (L)	1 (B/W)	Audio sound signal front LH	Output	ON	Receive audio signal	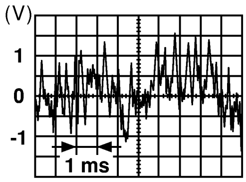 SKIA0177E	No sound from front door speaker and tweeter LH.
4 (BR)	3 (B/R)	Audio sound signal front RH	Output	ON	Receive audio signal	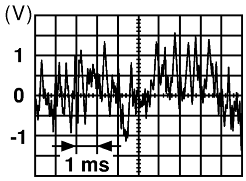 SKIA0177E	No sound from front door speaker and tweeter RH.
5 (Y/R)	Ground	Antenna signal	Output	ACC	Radio switch is ON	Approx. 12V	Receiving status of radio broadcast becomes bad.
6 (Y/G)	Ground	Battery power supply	Input	OFF	–	Battery voltage	System does not work properly.
7 (B/L) or (B/OR)	Ground	Illumination control signal	Input	OFF	Illumination control switch is operated by lighting switch in 1st position.	Changes between approx. 0V and approx. 12V	Audio unit illumination does not function when lighting switch is ON.
8 (R/L)	Ground	Lighting switch signal	Input	ON	Lighting switch ON	Approx. 12V	Audio unit illumination does not function when lighting switch is ON.
					Lighting switch OFF	Approx. 0V	
10 (GY/L)	Ground	ACC power supply	Input	ACC	–	Battery voltage	System does not work properly.
14 (LG)	13 (B/Y)	Audio sound signal rear LH	Output	ON	Receive audio signal	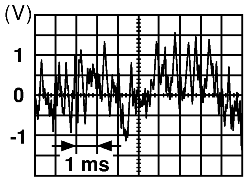 SKIA0177E	No sound from rear door speaker LH.
16 (OR)	15 (B/P)	Audio sound signal rear RH	Output	ON	Receive audio signal	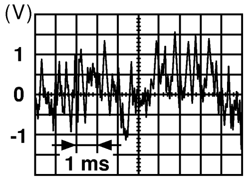 SKIA0177E	No sound from rear door speaker RH.

Trouble Diagnoses

AKS00BEI

AUDIO UNIT

Symptom	Possible causes	Repair order
Audio unit is inoperative (no digital display and no sound from speakers).	1. 10A fuse 2. 15A fuse 3. Poor audio unit case ground 4. Audio unit	1. Check 10A fuse [No. 4, located in fuse block (J/B)]. Turn ignition switch ON and verify that battery positive voltage is present at terminal 10 of audio unit. 2. Check 15A fuse (No.32, located in the fuse and fusible link box) and verify that battery positive voltage is present at terminal 6 of audio unit. 3. Check audio unit case ground. 4. Remove audio unit for repair.
Individual rear speaker is noisy or inoperative.	1. Each speaker 2. Output circuit to each speaker	1. Check speaker. 2. Check the output circuits to each speaker between audio unit and each speaker.
AM/FM stations are weak or noisy.	1. Roof antenna 2. Audio unit ground 3. Audio unit	1. Check roof antenna. 2. Check audio unit case ground. 3. Remove audio unit for repair.
Audio unit generates noise in AM and FM modes with engine running.	1. Poor audio unit ground 2. Loose or missing ground bonding straps 3. Ignition condenser or rear window defogger noise suppressor condenser 4. Ignition coil 5. Audio unit	1. Check audio unit case ground. 2. Check ground bonding straps. 3. Replace ignition condenser or rear window defogger noise suppressor condenser. 4. Check ignition coil. 5. Remove audio unit for repair.
Audio unit generates noise in AM and FM modes with accessories on (switch pops and motor noise).	1. Poor audio unit ground 2. Antenna 3. Accessory ground 4. Malfunctioning accessory	1. Check audio unit case ground. 2. Check antenna. 3. Check accessory ground. 4. Replace accessory.

Inspection

AKS00BEJ

AUDIO UNIT

All voltage inspections are made with:

- Ignition switch ON or ACC
- Audio unit ON
- Audio unit connected (If audio unit is removed for inspection, supply a ground to the case using a jumper wire.)

ANTENNA

Using a jumper wire, clip an auxiliary ground between antenna and body.

- If reception improves, check antenna ground (at body surface).
- If reception does not improve, check main feeder cable for short circuit or open circuit.

Removal and Installation of Audio Unit

AKS00BEL

REMOVAL

1. Remove instrument cluster lid C. Refer to IP-10, "INSTRUMENT PANEL ASSEMBLY" .
2. Remove screws (4) and disconnect connector, and remove audio unit.

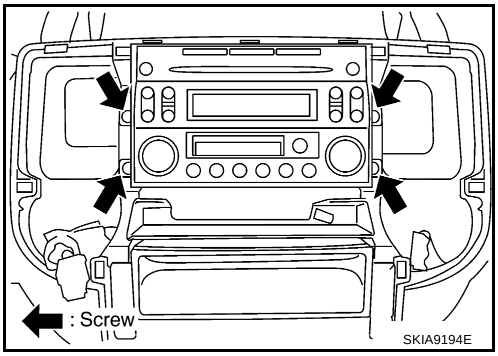

SKIA9194E

3. Remove screws (8) and bracket.

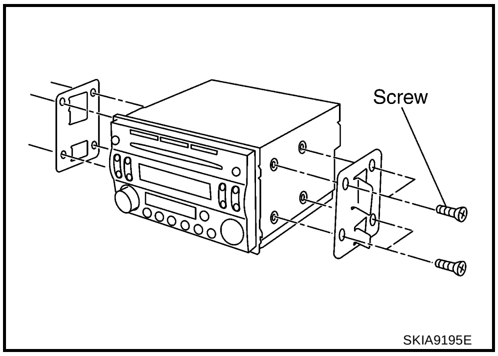

SKIA9195E

INSTALLATION

Install in the reverse order of removal.

Removal and Installation of Speakers

AKS00BEM

REMOVAL

1. Remove door finisher. Refer to EI-32, "DOOR FINISHER" .
2. Remove speakers.

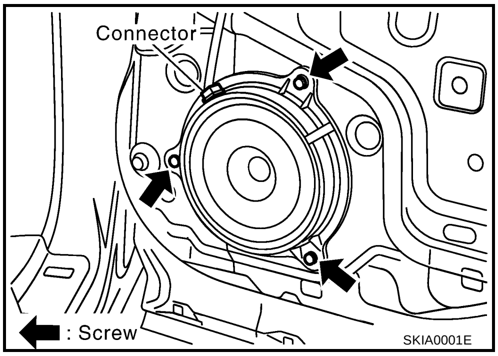

SKIA0001E

INSTALLATION

Install in the reverse order of remove.

Removal and Installation of Tweeters

AKS00BEN

REMOVAL

1. Remove front speaker grille. Refer to IP-12, "Front Speaker Grille (LH/RH)" .
2. Remove tweeters.

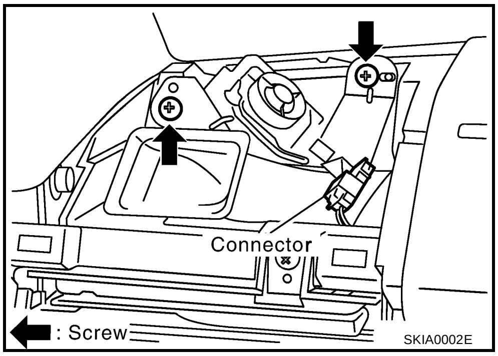

INSTALLATION

Install in the reverse order of remove.

A
B
C
D
E
F
G
H
I
J
AV
L
M

AUDIO ANTENNA

PFP:28200

Antenna Route

AKS00BEO

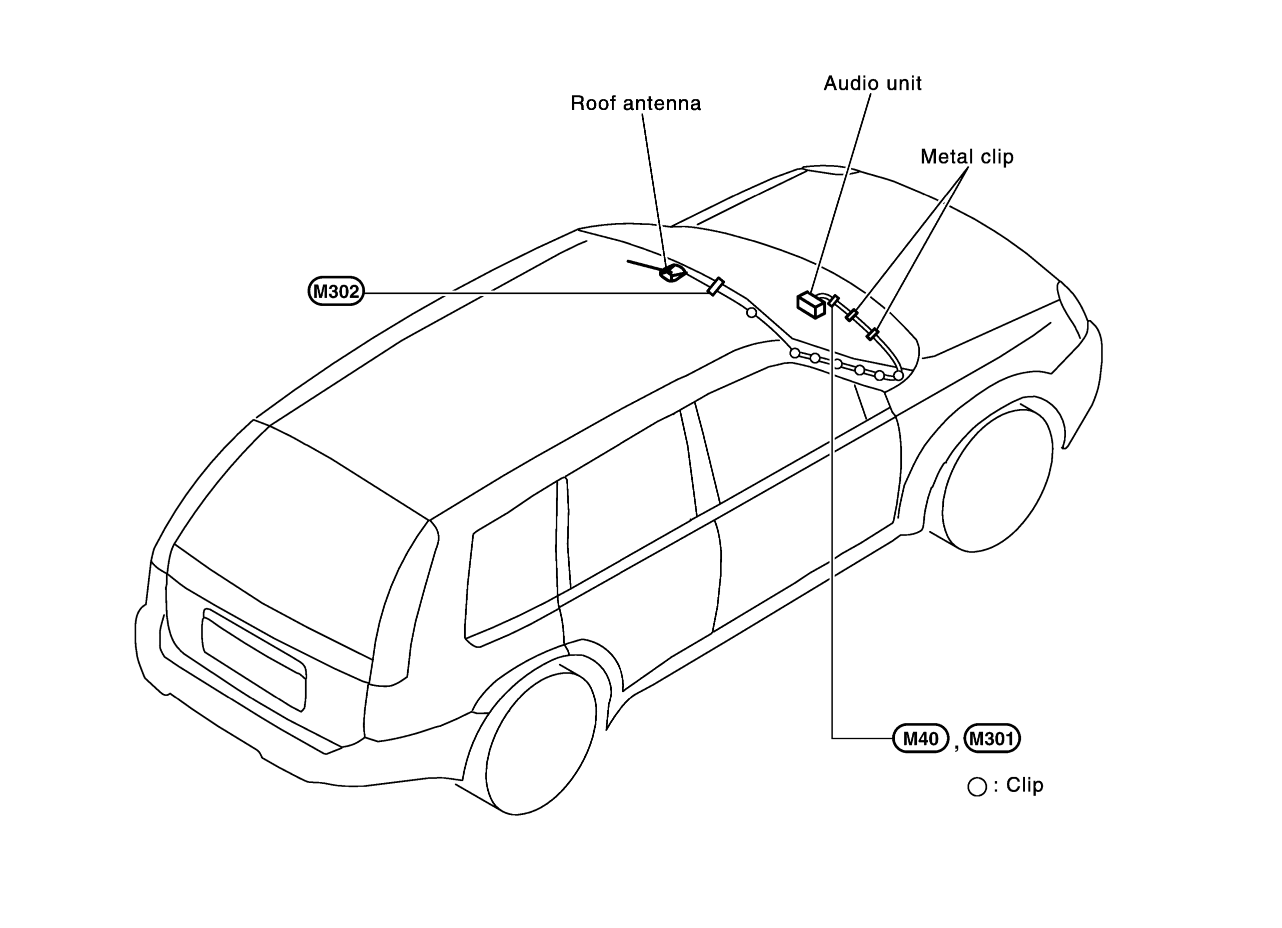

SKIB0669E

Removal and Installation of Roof Antenna

AKS00BEP

1. Remove headlining.
   - Refer to EI-40, "HEADLINING" in "Exterior/Interior (EI)" section.
2. Remove roof antenna mounting nuts, antenna plug, and disconnect power connector. Then remove roof antenna.

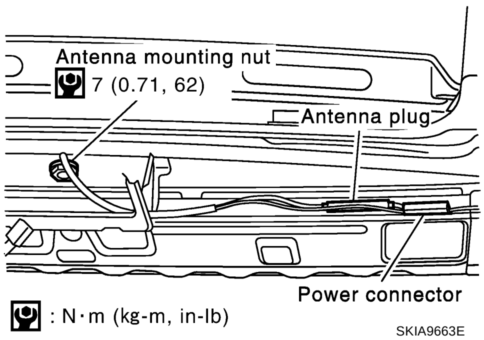

SKIA9663E

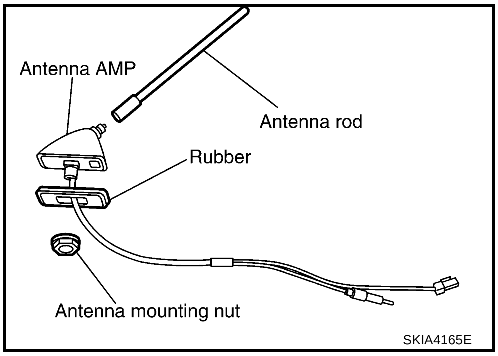

SKIA4165E